INSTRUCTIONS TO ASSEMBLE HEXAGONAL BOXES

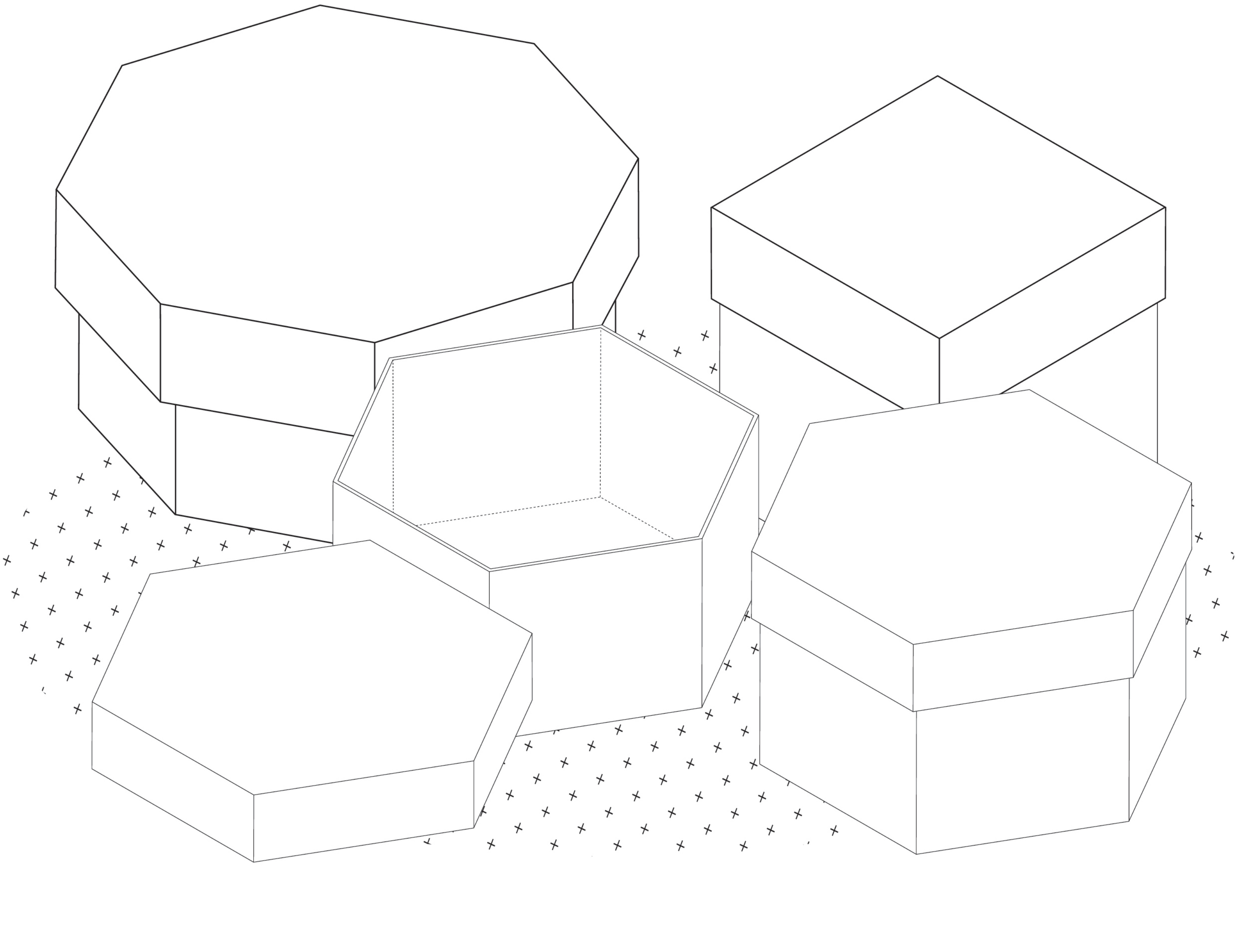

INDEX

+ Dimensions
+ Tools
+ Conventions
+ Pieces
+ Construction steps

DIMENSIONS
(FOR LEGAL SHEETS)

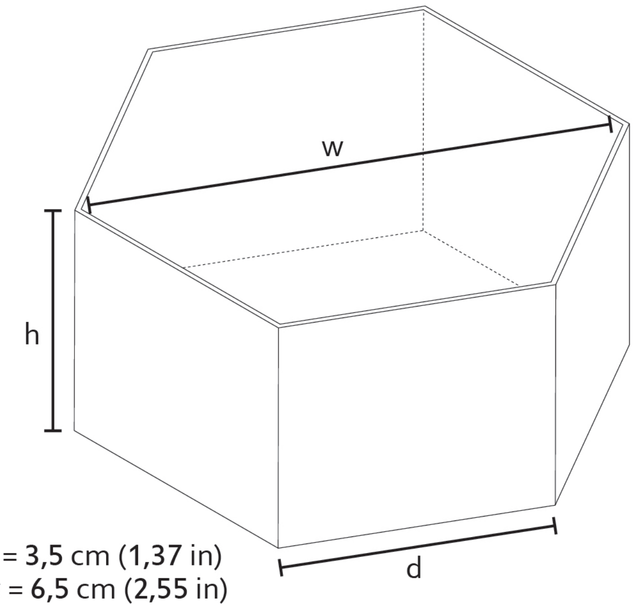

h = 3,5 cm (1,37 in)
w = 6,5 cm (2,55 in)
d = 3,5 cm (1,37 in)
V = 119 cm³ (7,26 in³)

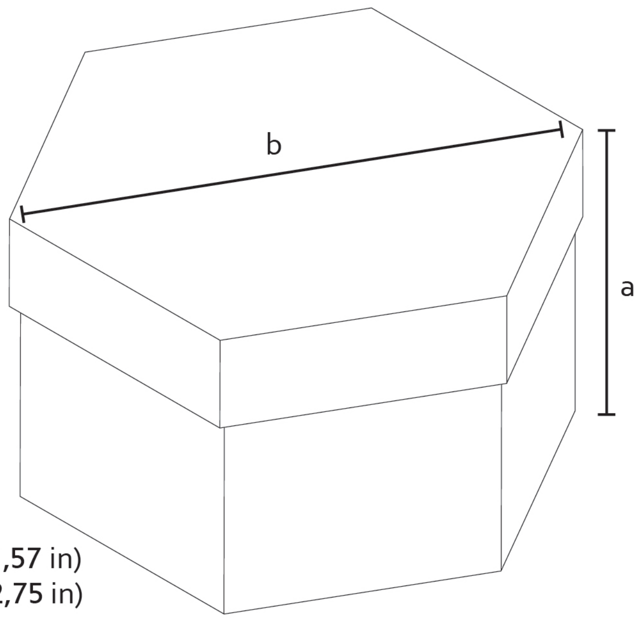

a = 4 cm (1,57 in)
b = 7 cm (2,75 in)

TOOLS

CUTTING TOOLS:

- Scissors or Utility knife + metal ruler (recommended)
- Cutting board (if available, if not a hard surface is good)

GLUE:

- Glue stick (recommended for thin paper like Bond or most home printer ones for example)
- PVA glue + Brush (the brush should be rinsed in soapy water to prevent it from drying)

PAPER

- Bond paper can be used in any home printer. For sturdier boxes card stock is a good choice.

CONVENTIONS

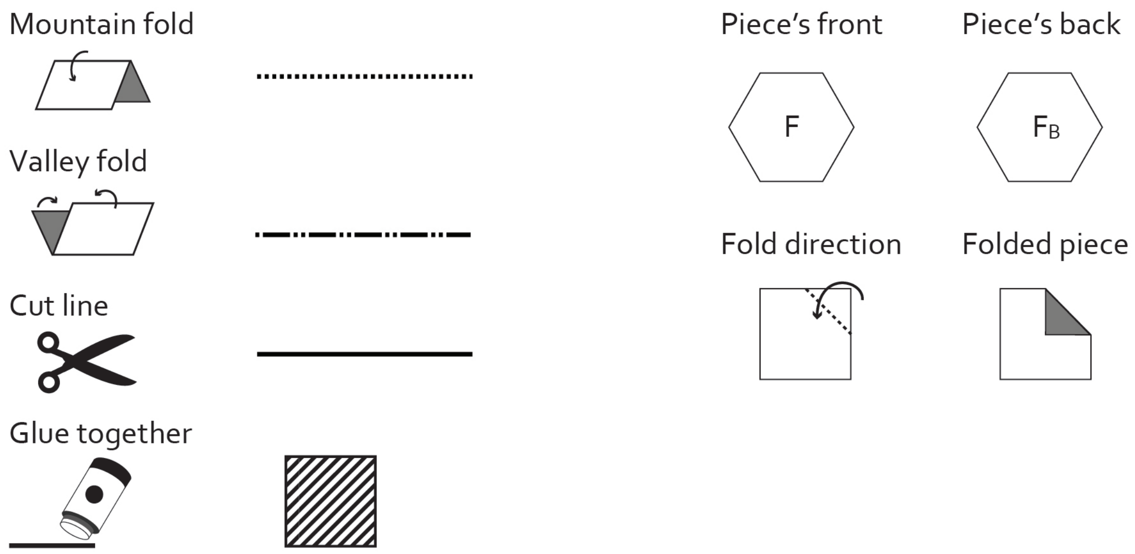

Licenced under Creative commons Attribution-NonCommercial-NoDerivatives 4.0 International (CC BY-NC-ND 4.0)

PIECES

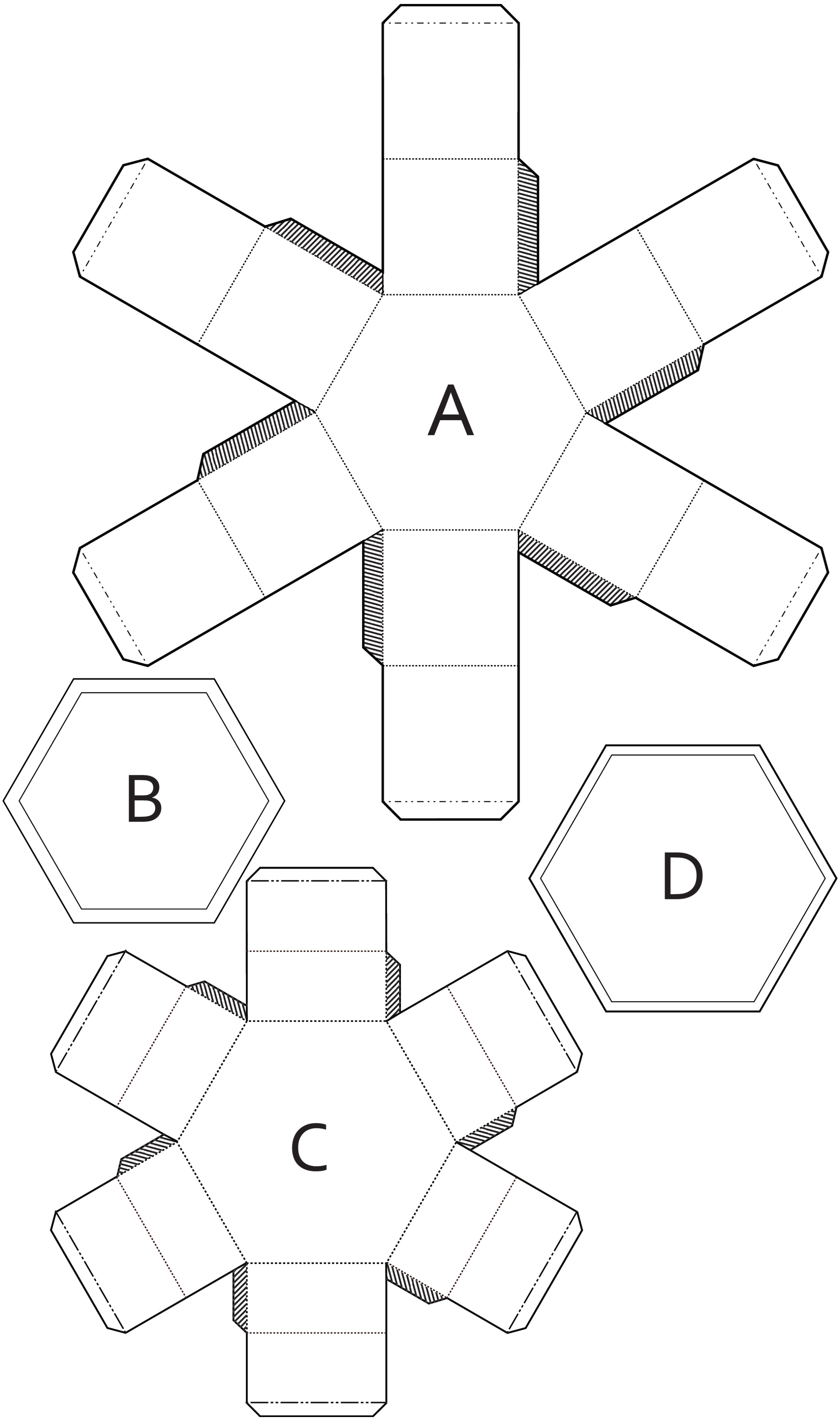

CONSTRUCTION STEPS

STEP 1

Cut all the pieces following the non-dashed lines, some parts have extra filling around the borders to give enough space for any possible cutting mistake.

STEP 2

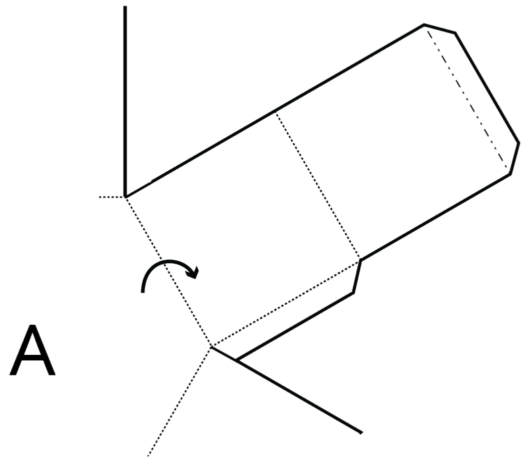

Take piece A and bend the parts around the hexagon at the center.

STEP 3

Fold the lids from the front to the back, repeat for each part.

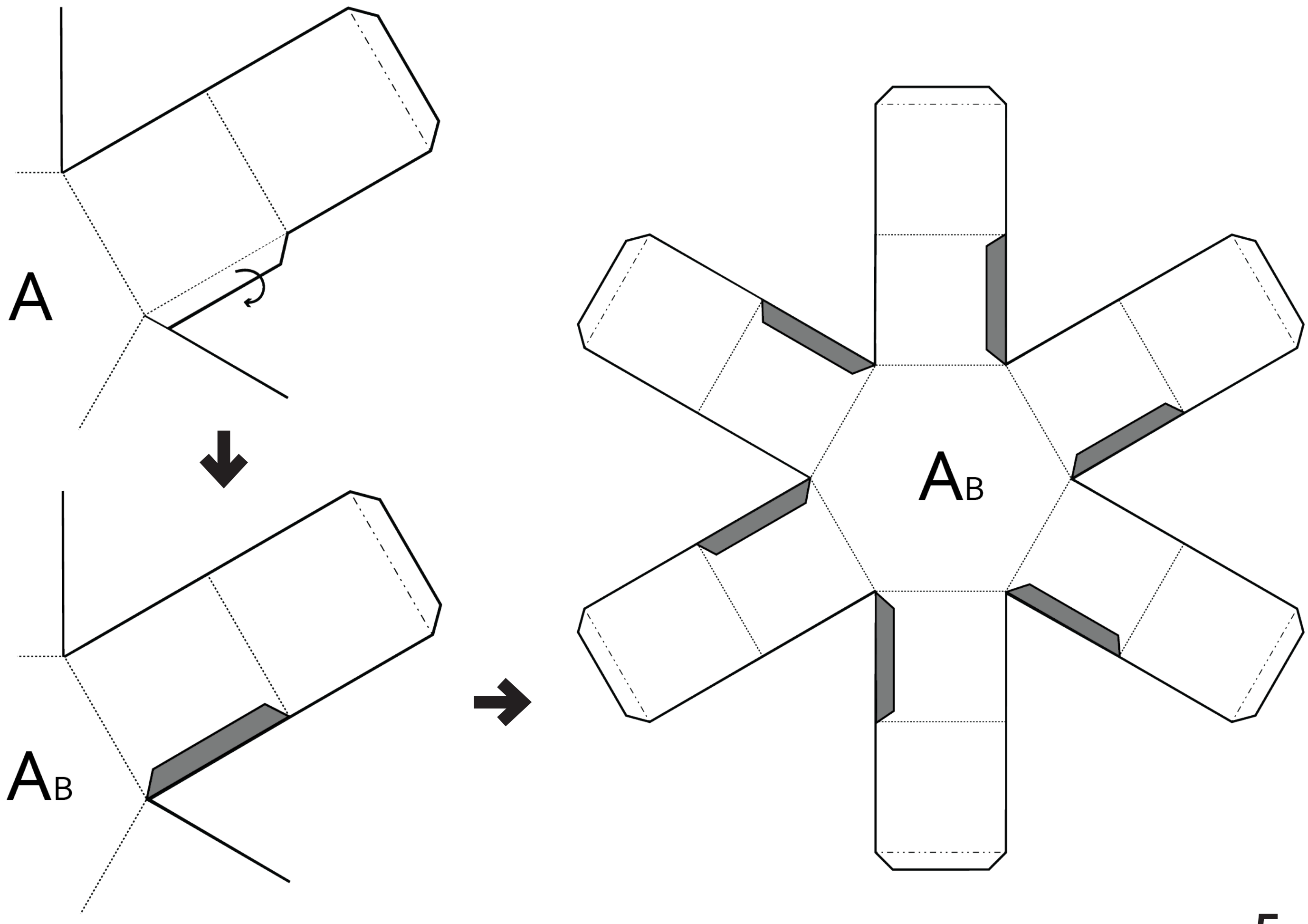

STEP 4

Apply glue on a lid and hold it against the next part as shown on the left figure below, apply a bit of pressure and keep both surfaces together for a while. Repeat the procedure for the other lids until all the parts form a complete hexagon.

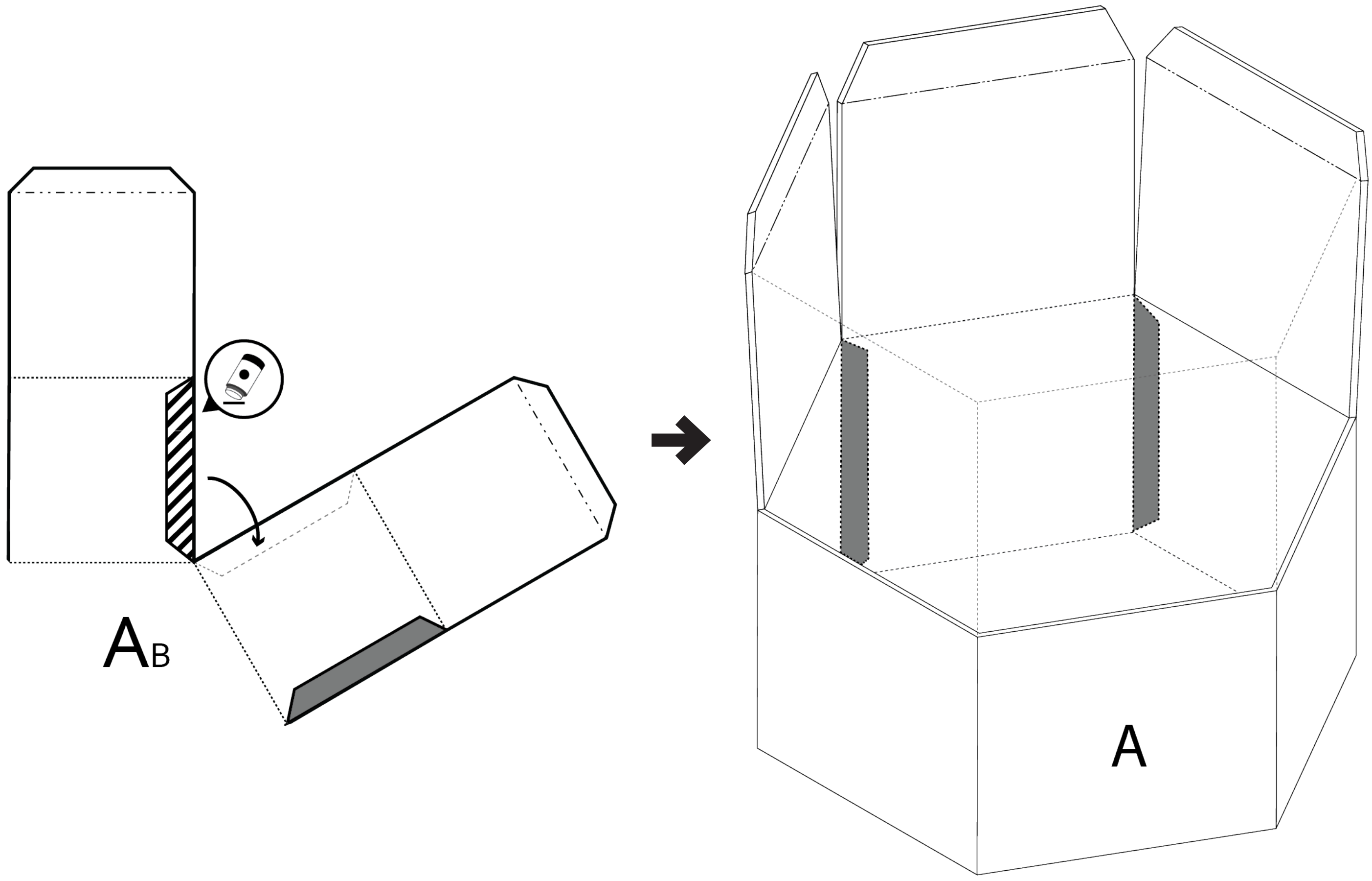

STEP 5

Bend the outer lid on each of the six parts and then bend each part in two following the dashed lines as in the image below.

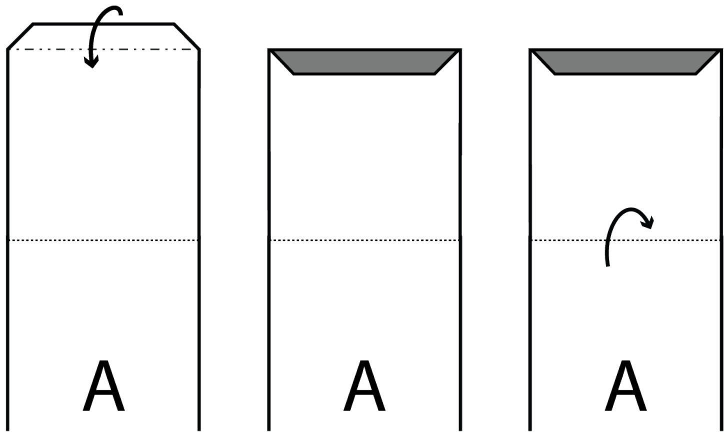

STEP 6

Apply glue inside a part (as shown on the image at the right) and then fold it, the lid should rest over the bottom of the box. Put a little pressure to make all parts stick together and repeat for each part.

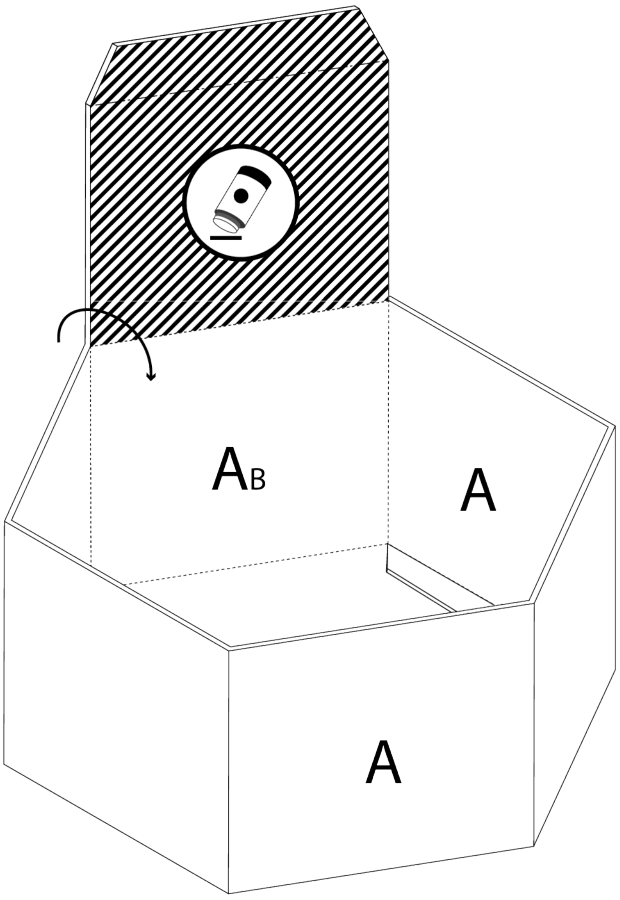

STEP 7
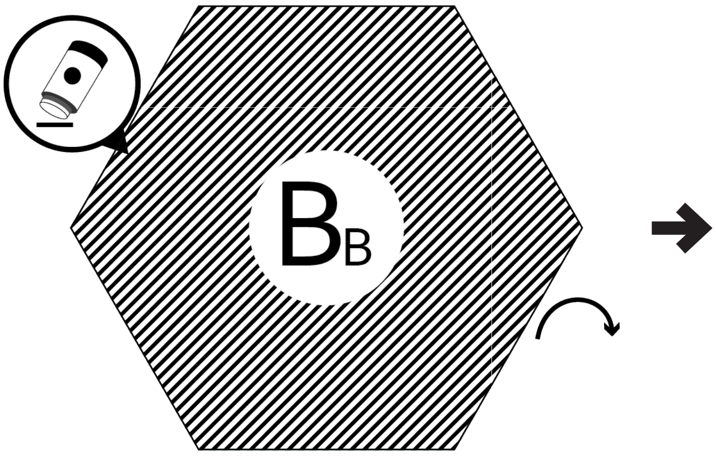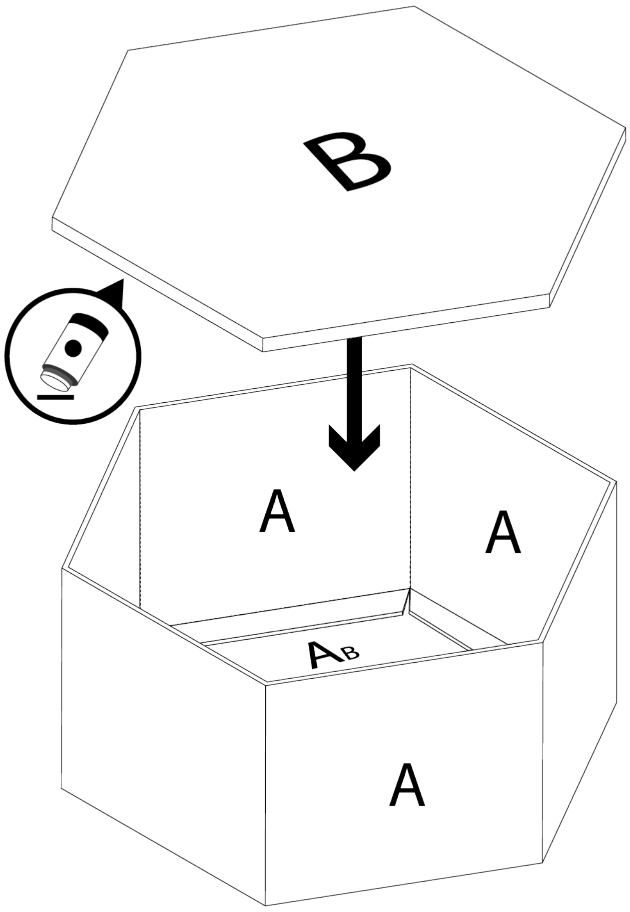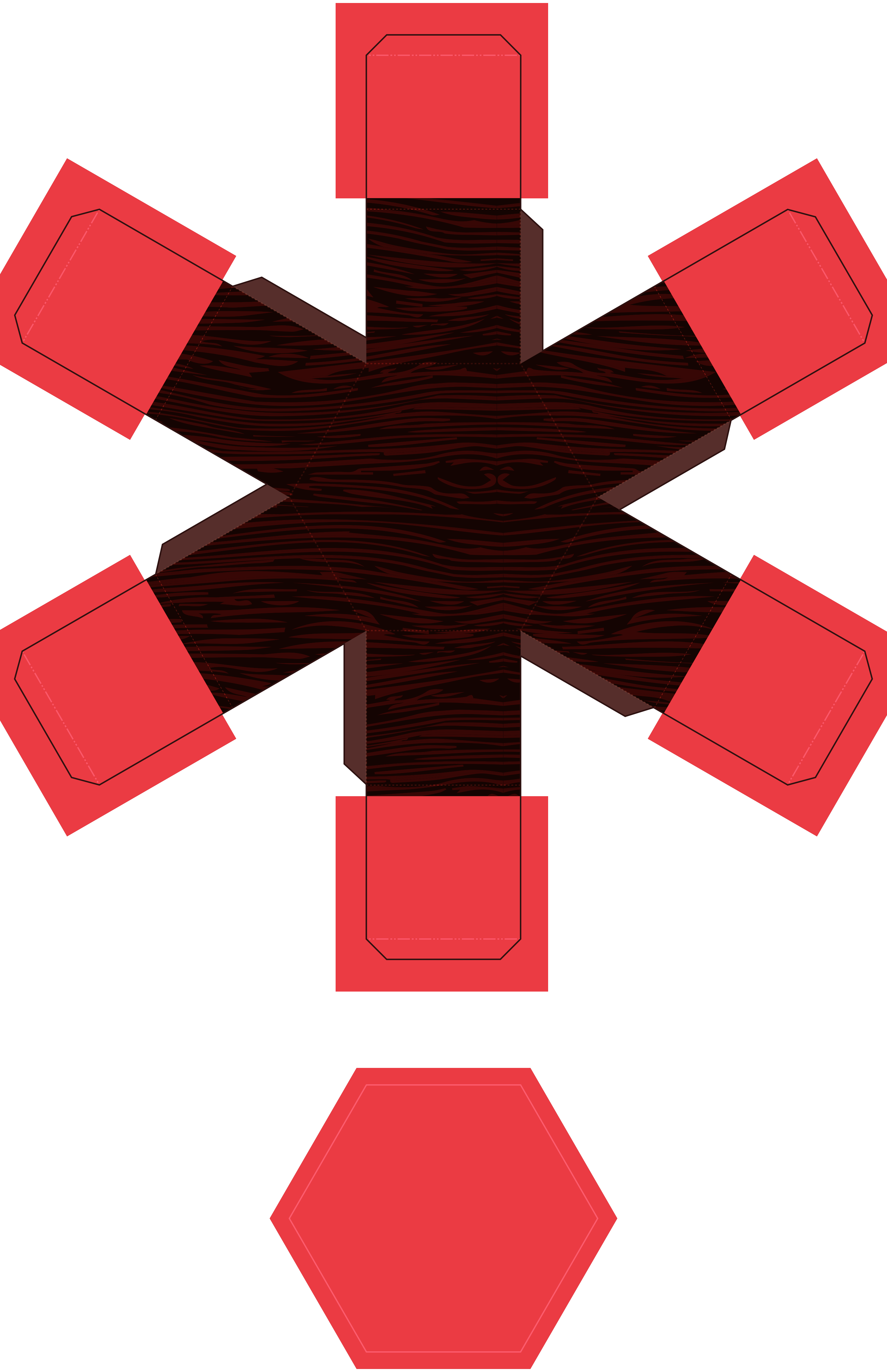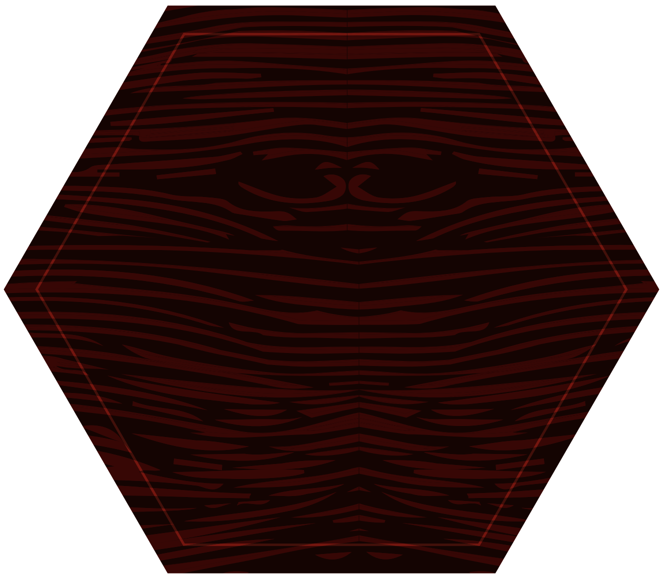
Apply glue to the back of piece B, turn it and then insert it into the box (printed side outside). Apply a little pressure to fix it in place. Repeat all this steps for the box lid